9113A / 9113B

9113A 9113B

Segurança Elétrica

DEKRA OCP 0089 Compulsório INMETRO

DK

ADVARSEL

GENERELT

Dette modul er beregnet for tilslutning til livsfarlige elektriske spændinger. Hvis denne advarsel ignoreres, kan det føre til alvorlig legemsbeskadigelse eller mekanisk ødelæggelse.
For at undgå faren for elektriske stød og brand skal sikkerhedsreglerne overholdes, og vejledningerne skal følges.
Specifikationerne må ikke overskrides, og modulet må kun benyttes som beskrevet i det følgende.
Installationsvejledningen skal studeres omhyggeligt, før modulet tages i brug. Kun kvalificeret personale (teknikere) må installere dette modul. Hvis modulet ikke benyttes som beskrevet i denne installationsvejledning, så forringes modulets beskyttelsesforanstaltninger.

ADVARSEL

FARLIG SPÆNDING

Der må ikke tilsluttes farlig spænding til modulet, før dette er fastmonteret, og følgende operationer bør kun udføres på modulet i spændingsløs tilstand og under ESD-sikre forhold:
Installation, ledningsmontage og -demontage. Fejlfinding på modulet.
Reparation af modulet og udskiftning af sikringer må kun foretages af PR electronics A/S.

ADVARSEL

Modulets frontplade må ikke åbnes, da dette vil medføre skade på stikforbindelsen til display- / programmeringsfronten PR 4501. Modulerne indeholder ingen DIP-switche eller jumpere.

SIKKERHEDSREGLER

Modtagelse og udpakning
Udpak modulet uden at beskadige det. Kontrollér ved modtagelsen, at modultypen svarer til den bestilte. Indpakningen bør følge modulet, indtil dette er monteret på blivende plads.
Miljøforhold
Undgå direkte sollys, kraftigt støv eller varme, mekaniske rystelser og stød, og udsæt ikke modulet for regn eller kraftig fugt. Om nødvendigt skal opvarmning, ud over de opgivne grænser for omgivelsestemperatur, forhindres ved hjælp af ventilation.
Alle moduler kan anvendes i Måle- / overspændingskategori II og Forureningsgrad 2. Modulerne er designet til at være sikker mindst op til en højde af 2000 m.
Installation
Modulet må kun tilsluttes af kvalificerede teknikere, som er bekendte med de tekniske udtryk, advarsler og instruktioner i installationsvejledningen, og som vil følge disse.
Hvis der er tvivl om modulets rette håndtering, skal der rettes henvendelse til den lokale forhandler eller alternativt direkte til **PR electronics A/S.**
Det er ikke tilladt at benytte flerkoret ledning ved tilslutning af forsyningsspænding med mindre ledningsenderne er forsynet med ledningstyller.
Beskrivelse af indgang / udgang og forsyningsforbindelser findes i produktmanualen og på sideskiltet.
Modulet er forsynet med skrueterminaler og skal forsynes fra en dobbeltisoleret/ forstærket isoleret spændingsforsyning. En afbryder placeres let tilgængeligt og tæt ved modulet. Afbryderen skal mærkes således, at der ikke er tvivl om, at den afbryder spændingen til modulet.
Ved installation på Power Rail 9400 bliver forsyningsspændingen leveret af Power Control Unit type 9410.
Kalibrering og justering
Under kalibrering og justering skal måling og tilslutning af eksterne spændinger udføres i henhold til denne installationsvejledning, og teknikeren skal benytte sikkerhedsmæssigt korrekte værktøjer og instrumenter.
Betjening under normal drift
Operatører må kun indstille eller betjene modulerne, når disse er fast installeret på forsvarlig måde i tavler el. lignende, så betjeningen ikke medfører fare for liv eller materiel. Dvs., at der ikke er berøringsfare, og at modulet er placeret, så det er let at betjene.
Rengøring
Modulet må, i spændingsløs tilstand, rengøres med en klud let fugtet med destilleret vand.

Eletriske specifikationer

Specifikationsområde	-20°C til +60°C
Forsyningsspænding	19,2...31,2 VDC
Max. forbrug, 1 / 2 kanaler	≤ 0,8 W / 1,4 W
Max. effekttab, 1 / 2 kanaler	≤ 0,8 W / 1,4 W
Sikring	400 mA T / 250 VAC
Isolationsspændinger, test / drift:	
Indgang til alle	2,6 kVAC/300 VAC forstærk.
Analog udgang til forsyning	2,6 kVAC/300 VAC forstærk.
Statusrelæ til forsyning	1,5 kVAC/150 VAC forstærk.
Kalibreringstemperatur	20...28°C
EMC-immunitetspåvirkning	< ±0,5% af span
Udvidet EMC-immunitet:	
NAMUR NE21, A-krit., gniststøj	< ±1% af span
2-trådsforsyning (klemme 44...43)	25...16 VDC / 0...20 mA
Relativ luftfugtighed	< 95% RH (ikke kond.)
Mål, med 4501 (H x B x D)	109 x 23,5 x 116 mm
Mål, uden 4501 (H x B x D)	109 x 23,5 x 104 mm
Kapslingsklasse	IP20

Indgang for RTD-typer:
Pt10,Pt20,Pt50,Pt100,Pt200,Pt250,Pt300,Pt400,Pt500,Pt1000
Ni50, Ni100, Ni120, Ni1000

Indgang for TC-typer:
B, E, J, K, L, N, R, S, T, U, W3, W5, LR

Strømindgang:

Programmerbare måleområder	0...20 og 4...20 mA
Indgangsmodstand	Nom. 20 Ω + PTC 50 Ω

Strømudgang:

Programmerbare signalområder	0...20/4...20/20...0/20...4 mA
Belastning	≤ 600 Ω
Belastningsstabilitet	≤ 0,01% af span / 100 Ω
Følerfejlsreaktion	0 / 3,5 / 23 mA / ingen
NAMUR NE43 Upscale/Downscale	23 mA / 3,5 mA
Strømbegrænsning	≤ 28 mA

Godkendelser:

DNV-GL, Ships & Offshore	TAA00000JD
ClassNK	TA18527M
c UL us, UL 61010-1	E314307
EAC	TR-CU 020/2011
EAC LVD	TR-CU 004/2011
EAC Ex	TR-CU 012/2011
SIL	IEC 61508

Overholdte myndighedskrav

EMC	2014/30/EU
LVD	2014/35/EU
ATEX	2014/34/EU
RoHS	2011/65/EU

UK

WARNING

GENERAL

This device is designed for connection to hazardous electric voltages. Ignoring this warning can result in severe personal injury or mechanical damage.
To avoid the risk of electric shock and fire, the safety instructions of this guide must be observed and the guidelines followed. The specifications must not be exceeded, and the device must only be applied as described in the following.
Prior to the commissioning of the device, this installation guide must be examined carefully.
Only qualified personnel (technicians) should install this device. If the equipment is used in a manner not specified by the manufacturer, the protection provided by the equipment may be impaired.

WARNING

HAZARDOUS VOLTAGE

Until the device is fixed, do not connect hazardous voltages to the device.
The following operations should only be carried out on a disconnected device and under ESD safe conditions:
General mounting, connection and disconnection of wires.
Troubleshooting the device.
Repair of the device and replacement of circuit breakers must be done by PR electronics A/S only.

WARNING

Do not open the front plate of the device as this will cause damage to the connector for the display / programming front PR 4501. The SYSTEM 9000 devices contain no DIP-switches or jumpers.

SAFETY INSTRUCTIONS

Receipt and unpacking
Unpack the device without damaging it. The packing should always follow the device until this has been permanently mounted. Check at the receipt of the device whether the type corresponds to the one ordered.
Environment
Avoid direct sunlight, dust, high temperatures, mechanical vibrations and shock, as well as rain and heavy moisture. If necessary, heating in excess of the stated limits for ambient temperatures should be avoided by way of ventilation.
All devices can be used for Measurement / Overvoltage Category II and Pollution Degree 2. The modules are designed to be safe at least under an altitude up to 2000 m.
Mounting
Only qualified technicians who are familiar with the technical terms, warnings, and instructions in this installation guide and who are able to follow these should connect the device.
Should there be any doubt as to the correct handling of the device, please contact your local distributor or, alternatively, **PR electronics A/S.**
The use of stranded wires is not permitted for mains wiring except when wires are fitted with cable ends.
Descriptions of input / output and supply connections are shown in the product manual and on the side label.
The device is provided with field wiring terminals and shall be supplied from a Power Supply having double / reinforced insulation. A power switch shall be easily accessible and close to the device. The power switch shall be marked as the disconnecting unit for the device. For installation on Power Rail 9400 the power is supplied by Power Control Unit 9410.
Calibration and adjustment
During calibration and adjustment, the measuring and connection of external voltages must be carried out according to the specifications of this installation guide. The technician must use tools and instruments that are safe to use.
Cleaning
When disconnected, the device may be cleaned with a cloth moistened with distilled water.

Electrical specifications

Specifications range	-20°C to +60°C
Supply voltage	19,2...31,2 VDC
Max. required power, 1 / 2 ch	≤ 0.8 W / 1.4 W
Max. power dissipation,1 / 2 ch	≤ 0.8 W / 1.4 W
Fuse	400 mA SB / 250 VAC
Isolation - test / working:	
Input to any	2.6 kVAC/300 VAC reinforced
Analog output to supply	2.6 kVAC/300 VAC reinforced
Status relay to supply	1.5 kVAC/150 VAC reinforced
Calibration temperature	20...28°C
EMC immunity influence	< ±0.5% of span
Extended EMC immunity:	
NAMUR NE21, A criterion, burst	< ±1% of span
2-wire supply (terminal 44...43)	25...16 VDC / 0...20 mA
Relative humidity	< 95% RH (non-cond.)
Dimensions, with 4501 (HxWxD)	109 x 23.5 x 116 mm
Dimensions, without 4501 (HxWxD)	109 x 23.5 x 104 mm
Protection degree	IP20

Input for RTD types:
Pt10,Pt20,Pt50,Pt100,Pt200,Pt250,Pt300,Pt400,Pt500,Pt1000
Ni50, Ni100, Ni120, Ni1000

Input for TC types:
B, E, J, K, L, N, R, S, T, U, W3, W5, LR

Current input:

Programmable measurement ranges	0...20 and 4...20 mA
Input resistance	Nom. 20 Ω + PTC 50 Ω

Current output:

Programmable signal ranges	0...20/4...20/20...0/20...4 mA
Load	≤ 600 Ω
Load stability	≤ 0.01% of span / 100 Ω
Sensor error detection	0 / 3.5 / 23 mA / none
NAMUR NE43 Upscale / Downscale	23 mA / 3.5 mA
Current limit	≤ 28 mA

Approvals:

DNV-GL, Ships & Offshore	TAA00000JD
ClassNK	TA18527M
c UL us, UL 61010-1	E314307
EAC	TR-CU 020/2011
EAC LVD	TR-CU 004/2011
EAC Ex	TR-CU 012/2011
SIL	IEC 61508

Observed authority requirements:

EMC	2014/30/EU
LVD	2014/35/EU
ATEX	2014/34/EU
RoHS	2011/65/EU

FR

AVERTISSEMENT

INFORMATIONS GENERALES

Ce module est conçu pour supporter une connexion à des tensions électriques dangereuses. Si vous ne tenez pas compte de cet avertissement, cela peut causer des dommages corporels ou des dégâts mécaniques. Pour éviter les risques d'électrocution et d'incendie, conformez-vous aux consignes de sécurité et suivez les instructions mentionnées dans ce guide. Vous devez vous limiter aux spécifications indiquées et respecter les instructions d'utilisation de ce module, telles qu'elles sont décrites dans ce guide. Il est nécessaire de lire ce guide attentivement avant de mettre ce module en marche. L'installation de ce module est réservée à un personnel qualifié (techniciens). Si la méthode d'utilisation de l'équipement diffère de celle décrite par le fabricant, la protection assurée par l'équipement risque d'être altérée.

AVERTISSEMENT

TENSION DANGEREUSE

Tant que le module n'est pas fixé, ne le mettez pas sous tensions dangereuses. Les opérations suivantes doivent être effectuées avec le module débranché et dans un environnement exempt de décharges électrostatiques (ESD): montage général, raccordement et débranchement de fils et recherche de pannes sur le module.
Seule PR electronics SARL est autorisée à réparer le module et à remplacer les fusibles.

AVERTISSEMENT

Ne pas ouvrir la plaque avant du module au risque d'endommager le connecteur de l'indicateur/la façade de programmation PR 4501. Les modules ne contiennent ni de commutateurs DIP ni de cavaliers.

CONSIGNES DE SECURITE

Réception et déballage
Déballez le module sans l'endommager. Il est recommandé de conserver l'emballage du module tant que ce dernier n'est pas définitivement monté. A la réception du module, vérifiez que le type de module reçu correspond à celui que vous avez commandé.
Environnement
N'exposez pas votre module aux rayons directs du soleil et choisissez un endroit à l'humidité modérée et à l'abri de la poussière, des températures élevées, des chocs et des vibrations mécaniques et de la pluie. Le cas échéant, des systèmes de ventilation permettent d'éviter qu'une pièce soit chauffée au-delà des limites prescrites pour les températures ambiantes.
Tous les modules peuvent être installés dans catégorie de mesure / surtension II et degré de pollution 2. Ce module est conçu pour fonctionner en toute sécurité sous une altitude inférieure à 2000 m.
Montage
Il est conseillé de réserver le raccordement du module aux techniciens qualifiés qui connaissent les termes techniques, les avertissements et les instructions de ce guide et qui sont capables d'appliquer ces dernières.
Si vous avez un doute quelconque quant à la manipulation du module, veuillez contacter votre distributeur local. Vous pouvez également vous adresser à **PR electronics SARL.**
Pour le raccordement électrique de l'alimentation générale, il est possible d'utiliser des fils multibrins seulement s'ils possèdent des embouts de câblage. Les connexions des alimentations et des entrées / sorties sont décrites dans le manuel du produit et sur l'étiquette de la face latérale du module.
Les appareils sont équipés de borniers à vis et doivent être raccordés à une alimentation qui a une isolation double ou renforcée. L'interrupteur doit être à proximité du module et facile d'accès. Ce bouton doit être étiqueté avec la mention : peut couper la tension du module.
Pour une installation sur le rail d'alimentation 9400, le module sera alimenté par le contrôleur d'alimentation 9410.
Etalonnage et réglage
Lors des opérations d'étalonnage et de réglage, il convient d'effectuer les mesures et les connexions des tensions externes en respectant les spécifications mentionnées dans ce guide. Les techniciens doivent utiliser des outils et des instruments pouvant être manipulés en toute sécurité.
Maintenance et entretien
Une fois le module hors tension, prenez un chiffon imbibé d'eau distillée pour le nettoyer.

Spécifications

Plage de température	-20° à +60°C
Tension d'alimentation	19,2...31,2 Vcc
Puissance nécessaire max., 1 / 2 voies	≤ 0,8 W / 1,4 W
Puissance dissipée max., 1 / 2 voies	≤ 0,8 W / 1,4 W
Fusible	400 mA SB / 250 Vca
Tension d'isolation, test / opération :	
Entrée aux autres	2,6 kVca/300 Vca renforcée
Sortie analogique à l'alimen.	2,6 kVca/300 Vca renforcée
Relais d'état à l'alimentation	1,5 kVca/150 Vca renforcée
Température d'étalonnage	20...28°C
Immunité CEM	< ±0,5% de l'échelle
Immunité CEM améliorée:	
NAMUR NE21, critère A, burst	< ±1% de l'échelle
Alimentation 2-fils (bornes 44...43)	25...16 Vcc / 0...20 mA
Humidité relative	< 95% HR (sans cond.)
Dimensions, avec 4501 (HxLxP)	109 x 23,5 x 116 mm
Dimensions, sans 4501 (HxLxP)	109 x 23,5 x 104 mm
Degré de protection	IP20

Entrée pour types Pt100:
Pt10,Pt20,Pt50,Pt100,Pt200,Pt250,Pt300,Pt400,Pt500,Pt1000
Ni50, Ni100, Ni120, Ni1000

Entrée pour types TC:
B, E, J, K, L, N, R, S, T, U, W3, W5, LR

Entrée courant:

Gammes de mesure program.	0...20 et 4...20 mA
Résistance d'entrée	Nom. 20 Ω + PTC 50 Ω

Sortie courant:

Gammes de signal program.	0...20/4...20/20...0/20...4 mA
Charge	≤ 600 Ω
Stabilité de charge	≤ 0,01% de l'échelle/100 Ω
Action en cas d'erreur capteur	0 / 3,5 / 23 mA / aucune
NAMUR NE43 haut / bas d'échelle	23 mA / 3,5 mA
Limite de courant	≤ 28 mA

Approbations:

DNV-GL, Ships & Offshore	TAA00000JD
ClassNK	TA18527M
c UL us, UL 61010-1	E314307
EAC	TR-CU 020/2011
EAC LVD	TR-CU 004/2011
EAC Ex	TR-CU 012/2011
SIL	IEC 61508

Compatibilité avec les normes:

CEM	2014/30/UE
DBT	2014/35/UE
ATEX	2014/34/UE
RoHS	2011/65/UE

DE

WARNUNG

ALLGEMEINES

Dieses Gerät ist für den Anschluss an lebensgefährliche elektrische Spannungen gebaut. Missachtung dieser Warnung kann zu schweren Verletzungen oder mechanischer Zerstörung führen. Um eine Gefährdung durch Stromstöße oder Brand zu vermeiden müssen die Sicherheitsregeln der Installationsanleitung eingehalten, und die Anweisungen befolgt werden. Die Spezifikationswerte dürfen nicht überschritten werden, und das Gerät darf nur gemäß folgender Beschreibung benutzt werden. Diese Installationsanleitung ist sorgfältig durchzulesen, ehe das Gerät in Gebrauch genommen wird. Nur qualifizierte Personen (Techniker) dürfen dieses Gerät installieren. Wenn das Gerät nicht wie in dieser Installationsanleitung beschrieben benutzt wird, werden die Schutzeinrichtungen des Gerätes beeinträchtigt.

WARNUNG

GEFÄHRLICHE SPANNUNG

Vor dem abgeschlossenen festen Einbau des Gerätes darf daran keine gefährliche Spannung angeschlossen werden, und folgende Maßnahmen sollten nur in spannungslosem Zustand des Gerätes und unter ESD-sicheren Verhältnisse durchgeführt werden: Installation, Montage und Demontage von Leitungen. Fehlersuche im Gerät. Reparaturen des Gerätes und Austausch von Sicherungen dürfen nur von PR electronics A/S vorgenommen werden.

WARNUNG

Die Frontplatte des Gerätes darf nicht geöffnet werden, weil hierdurch die Kontakte zur Kontaktierung des frontdisplays 4501 beschädigt werden können. Die Geräte enthalten keine internen DIP-Schalter oder Programmierbrücken.

SICHERHEITSREGELN

Empfang und Auspacken
Packen Sie das Gerät aus, ohne es zu beschädigen, und kontrollieren Sie beim Empfang, ob der Gerätetyp Ihrer Bestellung entspricht. Die Verpackung sollte beim Gerät bleiben, bis dieses am endgültigen Platz montiert ist.
Umgebungsbedingungen
Direkte Sonneneinstrahlung, starke Staubentwicklung oder Hitze, mechanische Erschütterungen und Stöße sind zu vermeiden; das Gerät darf nicht Regen oder starker Feuchtigkeit ausgesetzt werden. Bei Bedarf muss eine Erwärmung, welche die angegebenen Grenzen für die Umgebungstemperatur überschreitet, mit Hilfe eines Kühlgebläses verhindert werden.
Alle Geräte können für Mess- / Überspannungskategorie II und Verschmutzungsgrad 2 benutz werden. Das Gerät ist so konzipiert, dass es auch in einer Einsatzhöhe von bis zu 2000 m noch sicher funktioniert.
Installation
Das Gerät darf nur von qualifizierten Technikern angeschlossen werden, die mit den technischen Ausdrücken, Warnungen und Anweisungen in dieser Installationsanleitung vertraut sind und diese befolgen.
Sollten Zweifel bezüglich der richtigen Handhabung des Gerätes bestehen, sollte man mit dem Händler vor Ort Kontakt aufnehmen. Sie können aber auch direkt mit **PR electronics GmbH** Kontakt aufnehmen.
Der Einsatz von verdrillter Leitung ist nicht erlaubt außer die Enden sind mit Aderendhülsen versehen.
Eine Beschreibung von Eingangs- / Ausgangs- und Versorgungsanschlüssen befindet sich a im Produktmanual und auf dem Typenschild.
Das Gerät ist mit Feldverdrahtungsklemmen ausgestattet und wird von einem Netzteil mit doppelter / verstärkter Isolierung versorgt. Der Netzschalter sollte leicht zugänglich und in der Nähe des Gerätes sein. Der Netzschalter sollte mit einem Schild gekennzeichnet sein, auf dem steht, dass durch Betätigung dieses Schalters das Gerät vom Netz genommen wird.
Für den Anschluss auf der Power Rail 9400 wird das Gerät über das Power Control Unit 9410 versorgt.
Kalibrierung und Justierung
Während der Kalibrierung und Justierung sind die Messung und der Anschluss externer Spannungen entsprechend dieser Installationsanleitung auszuführen, und der Techniker muss hierbei sicherheitsmäßig einwandfreie Werkzeuge und Instrumente benutzen.
Reinigung
Das Gerät darf in spannungslosem Zustand mit einem Lappen gereinigt werden, der mit destilliertem Wasser leicht angefeuchtet ist.

Elektrische Daten

Umgebungstemperatur	-20°C bis +60°C
Versorgungsspannung	19,2...31,2 VDC
Leistungsbedarf, max., 1 / 2 Kan.	≤ 0,8 W / 1,4 W
Max. Verlustleistung, 1 / 2 Kan.	≤ 0,8 W / 1,4 W
Sicherung	400 mA T / 250 VAC
Isolationsspannungen, Test / Betrieb:	
Eingang zu irgenwelchen	2,6 kVAC/300 VAC verstärk.
Analogausgang zur Versorgung	2,6 kVAC/300 VAC verstärk.
Statusrelais zur Versorgung	1,5 kVAC/150 VAC verstärk
Kalibrierungstemperatur	20...28°C
EMV Störspannungseinfluss	< ±0,5% d. Messspanne
Erweitere EMV Störfestigkeit:	
NAMUR NE21, Kriterium A, Burst	< ±1% d. Messspanne
2-Draht-Versorg. (Klemme 44...43)	25...16 VDC / 0...20 mA
Relative Luftfeuchtigkeit	< 95% RH (nicht kond.)
Abmessungen, mit 4501 (HxBxT)	109 x 23,5 x 116 mm
Abmess., ohne 4501 (HxBxT)	109 x 23,5 x 104 mm
Schutzart	IP20

Eingang für WTH-Typen:
Pt10,Pt20,Pt50,Pt100,Pt200,Pt250,Pt300,Pt400,Pt500,Pt1000
Ni50, Ni100, Ni120, Ni1000

Eingang für TE-Typen:
B, E, J, K, L, N, R, S, T, U, W3, W5, LR

Stromeingang:

Programmierbare Messbereiche	0...20 und 4...20 mA
Eingangswiderstand	Nom. 20 Ω + PTC 50 Ω

Stromausgang:

Programmierbare Signalbereiche	0...20/4...20/20...0/20...4 mA
Belastung	≤ 600 Ω
Belastungsstabilität	≤ 0,01% d. Messsp. / 100 Ω
Fühlerfehlerreaktion	0 / 3,5 / 23 mA / keine
NAMUR NE43 Upscale / Downscale	23 mA / 3,5 mA
Strombegrenzung	≤ 28 mA

Zulassungen:

DNV-GL, Ships & Offshore	TAA00000JD
ClassNK	TA18527M
c UL us, UL 61010-1	E314307
EAC	TR-CU 020/2011
EAC LVD	TR-CU 004/2011
EAC Ex	TR-CU 012/2011
SIL	IEC 61508

Eingehaltene Behördenvorschriften:

EMV	2014/30/EU
LVD	2014/35/EU
ATEX	2014/34/EU
RoHS	2011/65/EU

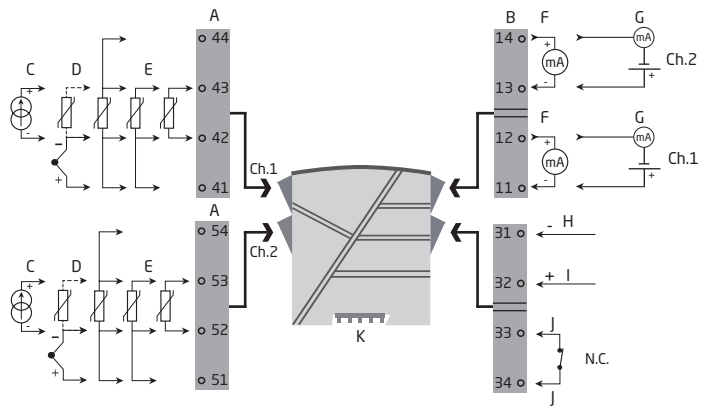

DK Påsætning af PR45xx:
1: Indsæt tappene på 45xx i hullerne øverst på modulet.
2: Sving 45xx på plads.
Aftagning af 45xx:
3/4: Tryk på udløserknap i bunden af 45xx og sving 45xx op.

UK Mounting of PR45xx:
1: Insert the tabs of the PR 45xx into the holes at the top of the device.
2: Hinge the PR 45xx down until it snaps into place.
Demounting of the PR 45xx
3: Push the release button on the bottom of the PR 45xx and hinge the the PR 45xx out and up.
4: With the PR 45xx hinged up, remove from holes at the top of the device.

FR Montage du PR45xx:
1: Insérez les crochets du 45xx dans les trous en haut du module.
2: Poussez le bas du 45xx vers le module.
Démontage du 45xx:
3/4: Appuyez sur le bouton de déclenchement en dessous du 45xx, puis tirez le 45xx vers le haut.

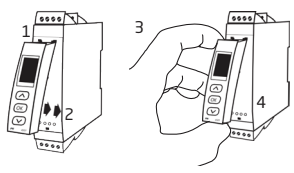

DE Anbringen des PR45xx:
1: Einbringen der beiden Fixierstifte des PR45xx in die Öffnungen an der oberen Frontplatte des Gerätes.
2: Das Display 45xx an der Unterkante einrasten lassen.
Entfernen des PR45xx:
3/4: Die Entriegelung des 45xx an der Unterseite betätigen und das 45xx vorsichtig abnehmen.

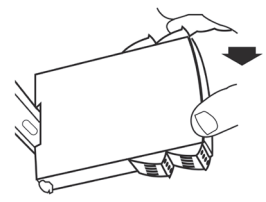

DK Montering på power rail / DIN-skinne.
UK Mounting on power rail / DIN rail.
FR Montage sur rail d'alimentation / rail DIN.
DE Montage auf Power Rail / DIN-Schiene.

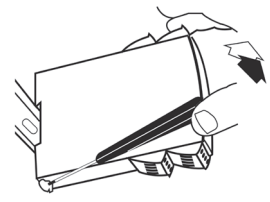

DK **Frigørelse fra power rail / DIN-skinne**
Husk først at demontere tilsluttningsklemmerne med farlig spænding. Modulet frigøres fra skinnen ved at løfte i den nederste lås.

UK **Demounting from power rail / DIN rail**
First, remember to demount the connectors with hazardous voltages. Detach the device from the rail by lifting the bottom lock.

FR **Démontage du rail d'alimentation / rail DIN**
Tout d'abord, n'oubliez pas de démonter les connecteurs où règnent des tensions dangereuses. Débloquez le verrou inférieur pour dégager le module du rail.

DE **Lösen von Power Rail / DIN-Schiene**
Zunächst ist gefährliche Spannung von den Anschlussklemmen zu trennen. Das Gerät wird von der Schiene gelöst, indem man den unteren Verschluss löst.

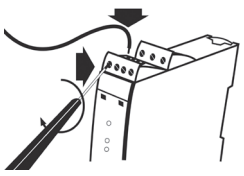

DK En eller to ledninger med (min....max.) ledningskvadrat 0,13...2,08 mm² / AWG 26...14 flerkoret ledning. Max. klemskruetilspændingsmoment 0,5 Nm.

UK One or two wires with (min....max.) wire size 0.13...2.08 mm² / AWG 26...14 stranded wire. Max. screw terminal torque 0.5 Nm.

FR Une ou deux fils avec taille des fils (min....max.) 0,13...2,08 mm² / AWG 26...14 fils multibrins. Pression max. avant déformation de la vis 0,5 Nm.

DE Ein oder zwei Leiter mit (min....max.) Leitungsquerschnitt 0,13...2,08 mm² / AWG 26...14 Litzendraht. Max. Klemmschraubenanzugsmoment 0,5 Nm.

DK Ex-godkendelser UK I.S approvals FR Approbations S.I. DE Ex-Zulassungen

	9113Bxx		9113Axx	
IECEx	[Ex ia Ga] IIC/IIB/IIA Ex nA nC IIC T4 Gc [Ex ia Da] IIIC [Ex ia Ma] I	IECEx KEM 09.0052 X Installation Drawing: 9113QI01	Ex nA nC IIC T4 Gc	IECEx KEM 09.0052 X Installation Drawing: 9113QI01
ATEX	II (1) G [Ex ia Ga] IIC/IIB/IIA II 3G Ex nA nC IIC T4 Gc II (1) D [Ex ia Da] IIIC I (M1) [Ex ia Ma] I	KEMA 07ATEX0148 X Installation Drawing: 9113QA01	II 3 G Ex nA nC IIC T4 Gc	KEMA 07ATEX0148 X Installation Drawing: 9113QA01
FM	Install in CL I, Div. 2, Gr. A-D T4 Provides IS circuits to CL I-III, Div. 1/2, Gr. A-G or CL I, Zn2 AEx/Ex nA nC [ia] IIC T4	FM19US0059X / FM19CA0032X Installation Drawing: 9113QF01	Install in CL I, Div. 2, Gr. A-D T4 or CL I, Zone 2, AEx/Ex nA nC IIC T4	FM19US0059X / FM19CA0032X Installation Drawing: 9113QF01
INMETRO	[Ex ia Ga] IIC/IIB/IIA [Ex ia Da] IIIC / [Ex ia Ma] I Ex nA nC IIC T4 Gc	DEKRA 16.0003X Installation Drawing: 9113QB01	-	-
UL (9113Ax-U9 / 9113Bx-U9)	Install in CL I DIV2 GP A-D T4 provides IS circuits to CL I-III DIV 1 GP A-G or install in CL I Zn2 Gp IIC T4 provides IS circuits to CL I ZnO Gp IIC/Zn20 Gp IIIC	E233311 Installation Drawing: 9113QU01	Install in CL I, Div. 2, Gr. A-D T4 or CL I, Zone 2, AEx nA nC IIC T4	E233311 Installation Drawing: 9113QU01

DK Kina RoHS UK China RoHS FR RoHS chinois DE China-RoHS

Part Name	Hazardous Substances					
	Lead (Pb)	Mercury (Hg)	Cadmium (Cd)	Hexavalent Chromium (Cr (VI))	Polybrominated biphenyls (PBB)	Polybrominated diphenyl ethers (PBDE)
Printed circuit board	X	O	O	O	O	O

This table is prepared in accordance with the provisions of SJ/T 11364
O: Indicates that said hazardous substance contained in all of the homogeneous materials for this part is below the limit requirement of GB/T 26572.
X: Indicates that said hazardous substance contained in at least one of the homogeneous materials used for this part is above the limit requirement of GB/T 26572.

The product's Environmentally Friendly Use Period (EFUP) is 50 years

DK Sideskilt UK Side label FR Etiquette DE Typenschild

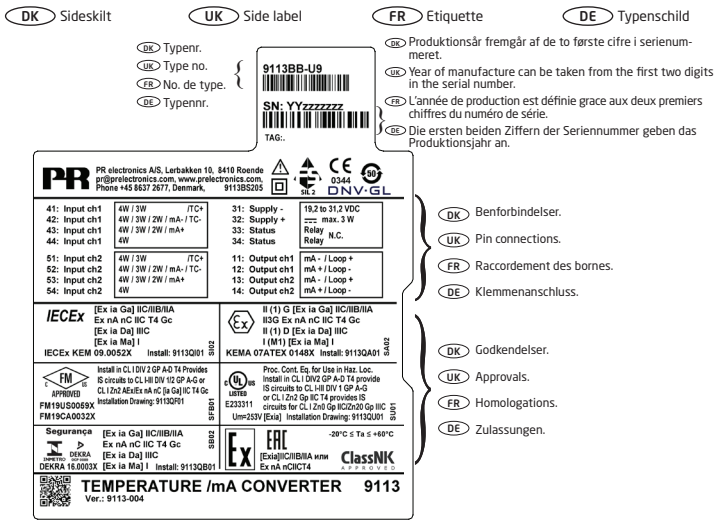

DK Dokumentation, godkendelser og yderligere information findes på internettet på **www.prelectronics.dk**

UK Documentation, permits and other information can be found on the internet at **www.prelectronics.com**

FR La documentation et toute autre information peuvent être trouvées sur l'Internet sur notre site: **www.prelectronics.fr**

DE Dokumentationen, Zulassungen und andere Informationen können auf unserer Internet-Seite unter **www.prelectronics.de** gefunden und abgerufen werden.

ATEX Installation drawing V5R0

For safe installation of 9113 the following must be observed. The module shall only be installed by qualified personnel who are familiar with the national and international laws, directives and standards that apply to this area.
Year of manufacture can be taken from the first two digits in the serial number.

For Installation in Zone 2 the following must be observed.
The 4501 programming module is to be used solely with PR electronics modules. It is important that the module is undamaged and has not been altered or modified in any way. Only 4501 modules free of dust and moisture shall be installed.

ATEX Certificate: KEMA 07ATEX 0148 X

Marking 9113Bx:
II (1) G [Ex ia Ga] IIC/IIB/IIA
II 3 G Ex nA nC IIC T4 Gc
II (1) D [Ex ia Da] IIIC
I (M1) [Ex ia Ma] I

Marking 9113Ax II 3 G Ex nA nC IIC T4 Gc

Standards EN 60079-0 : 2012, EN 60079-11 : 2012, EN 60079-15 : 2010

Supply terminal (31,32)
Voltage : 19.2 – 31.2 VDC

Status Relay, terminal (33,34)

		Zone 2 Installation
Voltage max:	125 VAC / 110 VDC	32 VAC / 32 VDC
Power max:	62.5 VA / 32 W	16 VA / 32 W
Current max:	0.5 A AC / 0.3 ADC	0.5 A AC / 1 ADC

Installation notes:

Install in pollution degree 2, overvoltage category II as defined in EN60664-1.

Do not separate connectors when energized and an explosive gas mixture is present.
Do not mount or remove modules from the Power Rail when an explosive gas mixture is present.
Disconnect power before servicing.
The wiring of unused terminals is not allowed.

In type of protection [Ex ia Da] the parameters for intrinsic safety for gas group IIB are applicable.

For installation in Zone 2, the module shall be installed in an enclosure in type of protection Ex n or Ex e, providing a degree of protection of at least IP54. Cable entry devices and blanking elements shall fulfill the same requirements.

For installation on Power Rail in Zone 2, only Power Rail type 9400 supplied by Power Control Unit type 9410 (Type Examination Certificate KEMA 07ATEX0152 X) is allowed.

9113Bx Installation:

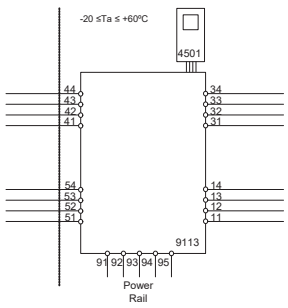

Ex input
CH1 (terminal 41,42,43,44)
CH2 (terminal 51,52,53,54)
U_o: 8.7 V
I_o: 18.4 mA
P_o: 40 mW
Lo/Ro 892 µH/Ω

	IIC	IIB	IIA or I
C_o	5 µF	50 µF	1000 µF
L_o	100 mH	300 mH	700 mH

U_i: 10 V
I_i: 30 mA
C_i: 30 nF
L_i 820 nH

U_m: 253 V max. 400 Hz

Supply / Output:
(terminal 11,12,13,14)
(terminal 31,32,33,34)
(terminal 91,92,93,94,95)

9113Bx Installation:

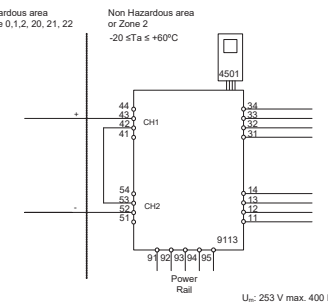

Ex input
CH1 (terminal 43)
CH2 (terminal 52)
U_o: 17.4 V
I_o: 18.4 mA
P_o: 80 mW
Lo/Ro 445 µH/Ω

	IIC	IIB	IIA or I
C_o	0.3 µF	1.6 µF	8 µF
L_o	80 mH	250 mH	600 mH

U_i: 10 V
I_i: 30 mA
C_i: 15 nF
L_i 1.7 µH

U_m: 253 V max. 400 Hz

Supply / Output:
(terminal 11,12,13,14)
(terminal 31,32,33,34)
(terminal 91,92,93,94,95)

9113Ax Installation:

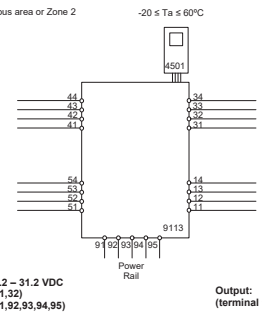

Supply: 19.2 – 31.2 VDC
(terminal 31,32)
(terminal 91,92,93,94,95)

Output:
(terminal 11,12,13,14)

Input
CH1 (terminal 41,42,43,44)
CH2 (terminal 51,52,53,54)

Status Relay, terminal (33,34)

		Zone 2 Installation
Voltage max:	125 VAC / 110 VDC	32 VAC / 32 VDC
Power max:	62.5 VA / 32 W	16 VA / 32 W
Current max:	0.5 A AC / 0.3 ADC	0.5 A AC / 1 ADC

For installation in Zone 2, the module shall be installed in an enclosure in type of protection Ex n or Ex e, providing a degree of protection of at least IP54. Cable entry devices and blanking elements shall fulfill the same requirements.

For installation on Power Rail in Zone 2, only Power Rail type 9400 supplied by Power Control Unit type 9410 (Type Examination Certificate KEMA 07ATEX0152 X) is allowed.

For Installation in Zone 2 the following must be observed. The 4501 programming module is to be used solely with PRelectronics modules. It is important that the module is undamaged and has not been altered or modified in any way. Only 4501 modules free of dust and moisture shall be installed.

IECEx Installation drawing – V5R0

For safe installation of 9113 the following must be observed. The module shall only be installed by by qualified personnel who are familiar with the national and international laws, directives and standards that apply to this area.
Year of manufacture can be taken from the first two digits in the serial number.

For Installation in Zone 2 the following must be observed.
The 4501 programming module is to be used solely with PR electronics modules. It is important that the module is undamaged and has not been altered or modified in any way. Only 4501 modules free of dust and moisture shall be installed.

IECEx Certificate: KEM 09.0052 X

Marking 9113Bx:
[Ex ia Ga] IIC/IIB/IIA
Ex nA nC IIC T4 Gc
[Ex ia Da] IIIC
[Ex ia Ma] I

Marking 9113Ax II 3 G Ex nA nC IIC T4 Gc

Standards: IEC60079-0:2011, IEC60079-11:2011, IEC60079-15:2010

Supply terminal (31,32)
Voltage : 19.2 – 31.2 VDC

Status Relay. terminal (33,34)

		Zone 2 Installation
Voltage max:	125 VAC / 110 VDC	32 VAC / 32 VDC
Power max:	62,5 VA / 32 W	16 VA / 32 W
Current max:	0.5 A AC / 0.3 ADC	0.5 A AC / 1 ADC

Installation notes:

Install in pollution degree 2, overvoltage category II as defined in IEC60664-1.

Do not separate connectors when energized and an explosive gas mixture is present.
Do not mount or remove modules from the Power Rail when an explosive gas mixture is present.
Disconnect power before servicing.

The wiring of unused terminals is not allowed.

In type of protection [Ex ia Da] the parameters for intrinsic safety for gas group IIB are applicable.

For installation in Zone 2, the module shall be installed in an enclosure in type of protection Ex n or Ex e, providing a degree of protection of at least IP54. Cable entry devices and blanking elements shall fulfill the same requirements.

For installation on Power Rail in Zone 2, only Power Rail type 9400 supplied by Power Control Unit type 9410 (Type Examination Certificate IECEx KEM 08.0025X) is allowed.

9113Bx Installation:

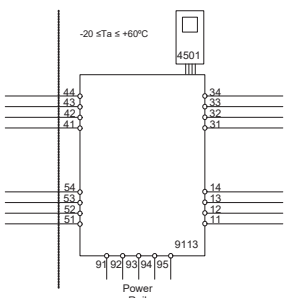

Ex input
CH1 (terminal 41,42,43,44)
CH2 (terminal 51,52,53,54)
U_o: 8.7 V
I_o: 18.4 mA
P_o: 40 mW
Lo/Ro 892 µH/Ω

	IIC	IIB	IIA or I
C_o	5 µF	50 µF	1000 µF
L_o	100 mH	300 mH	700 mH

U_i: 10 V
I_i: 30 mA
C_i: 30 nF
L_i 820 nH

9113Bx Installation:

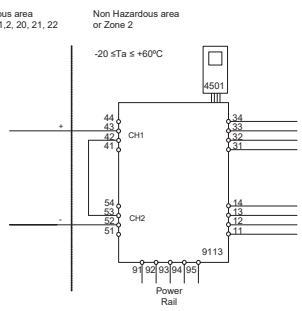

Ex input
CH1 (terminal 43 +)
CH2 (terminal 52 -)
U_o: 17.4 V
I_o: 18.4 mA
P_o: 80 mW
Lo/Ro 445 µH/Ω

	IIC	IIB	IIA
C_o	0.3 µF	1.6 µF	8 µF
L_o	80 mH	250 mH	600 mH

U_i: 10 V
I_i: 30 mA
C_i: 15 nF
L_i 1.7 µH

U_m: 253 V max. 400 Hz

Supply / Output:
(terminal 11,12,13,14)
(terminal 31,32,33,34)
(terminal 91,92,93,94,95)

9113Ax Installation:

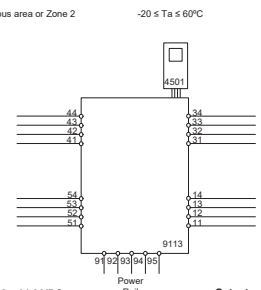

Supply: 19.2 – 31.2 VDC
(terminal 31,32)
(terminal 91,92,93,94,95)

Output:
(terminal 11,12,13,14)

Input
CH1 (terminal 41,42,43,44)
CH2 (terminal 51,52,53,54)

Status Relay. terminal (33,34)

		Zone 2 Installation
Voltage max:	125 VAC / 110 VDC	32 VAC / 32 VDC
Power max:	62,5 VA / 32 W	16V A / 32 W
Current max:	0.5 A AC / 0.3 ADC	0.5 A AC / 1 ADC

For installation in Zone 2, the module shall be installed in an enclosure in type of protection Ex n or Ex e, providing a degree of protection of at least IP54. Cable entry devices and blanking elements shall fulfill the same requirements.

For installation on Power Rail in Zone 2, only Power Rail type 9400 supplied by Power Control Unit type 9410 (Type Examination Certificate IECEx KEM 08.0025X) is allowed.

For Installation in Zone 2 the following must be observed.
The 4501 programming module is to be used solely with PR electronics modules. It is important that the module is undamaged and has not been altered or modified in any way. Only 4501 modules free of dust and moisture shall be installed.

UL Installation drawing 9113QU01-V1R0

For safe installation of associated apparatus 9113Bx-U9 the following must be observed. The module shall only be installed by qualified personnel who are familiar with the national and international laws, directives and standards that apply to this area.

For Installation in Div2/Zone2 the following must be observed.
The 4501 programming module is to be used solely with PR electronics modules. It is important that the module is undamaged and has not been altered or modified in any way. Only 4501 modules free of dust and moisture shall be installed.

9113AA-U9, 9113BA-U9: 1 Channel Temperature / mA Converter
9113AB-U9, 9113BB-U9: 2 Channel Temperature / mA Converter

Marking:

c UL us LISTED
Proc. Cont. Eq. for Use in Haz. Loc.
Install in CL I DIV2 GP A-D T4 provide
IS circuits to CL I-III DIV 1 GP A-G
or CL I Zn2 Gp IIC T4 provides IS
circuits for CL I Zn0 Gp IIC/Zn20 Gp IIIC
E233311 [Exia] Installation Drawing: 9113QU01
Um=253V

The 9113Bx-U9 is a galvanic isolating associated apparatus for installation in non-hazardous locations or Class I, Division 2, Groups A – D hazardous locations with intrinsically safe connections to Class I, II and III hazardous locations.

c UL us LISTED
Proc. Cont. Eq. for Use in Haz. Loc.
Install in CL I DIV2 GP A-D T4
or CL I Zn2 Gp IIC T4
E233311 Installation Drawing: 9113QU01

The 9113Ax-U9 is intended for installation in non-hazardous locations or Class I,Division 2, Groups A – D or Zone 2 Croup IIC hazardous locations.

Standards:

- UL 121201 NONINCENDIVE ELECTRICAL EQUIPMENT FOR USE IN CLASS I AND II, DIVISION 2 AND CLASS III, DIVISIONS 1 AND 2 HAZARDOUS (CLASSIFIED) LOCATIONS Edition 9 - Revision Date 2018/08/31
- CSA C22.2 NO. 213 NONINCENDIVE ELECTRICAL EQUIPMENT FOR USE IN CLASS I AND II, DIVISION 2 AND CLASS III, DIVISIONS 1 AND 2 HAZARDOUS (CLASSIFIED) LOCATIONS- Edition 3 - Issue Date 2017/09/01
- UL 913 STANDARD FOR INTRINSICALLY SAFE APPARATUS AND ASSOCIATED APPARATUS FOR USE IN CLASS I, II, III, DIVISION 1, HAZARDOUS (CLASSIFIED) LOCATIONS- Edition 8 - Revision Date 2015/10/16
- CSA C22.2 NO. 60079-0 EXPLOSIVE ATMOSPHERES — PART 0: EQUIPMENT — GENERAL REQUIREMENTS- Edition 3 - Issue Date 2015/10/01
- CSA C22.2 NO. 60079-11:14 EXPLOSIVE ATMOSPHERES — PART 11: EQUIPMENT PROTECTION BY INTRINSIC SAFETY "I"- Edition 2 - Issue Date 2014/02/01

9113Bx-U9 Installation

Hazardous Classified Location
Class I/II/III, Division 1, Group A,B,C,D,E,F,G
Zone 0,1, 2 Group IIC, IIB, IIA or
Zone 20, 21

Unclassified Location or
Hazardous Classified Location
Class I, Division 2, Group ABCD T4
Class I Zone 2 Group IIC T4

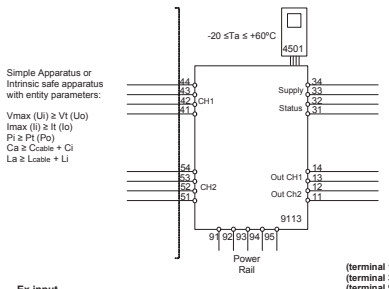

Ex input
CH1 (terminal 41,42,43,44)
CH2 (terminal 51,52,53,54)
Voc or U_o: 8.7 V
Isc or I_o: 18.4 mA
P_o: 40 mW
Lo/Ro 892µH/Ω

	IIC or A,B	IIB or C,E,F	IIA or D,G
Ca or C_o	5 µF	50 µF	1000 µF
La or L_o	100 mH	300 mH	700 mH

Vmax or U_i: 10 V
Imax or I_i: 30 mA
C_i: 30 nF
L_i 820 nH

(terminal 11,12,13,14)
(terminal 31,32,33,34)
(terminal 91,92,93,94,95)
U_m: 253V, max 400Hz

9113Bx-U9 Splitter Installation

Hazardous Classified Location
Class I/II/III, Division 1, Group A,B,C,D,E,F,G
Zone 0,1, 2 Group IIC, IIB, IIA or
Zone 20, 21

Unclassified Location or
Hazardous Classified Location
Class I, Division 2, Group ABCD T4
Class I Zone 2 Group IIC T4

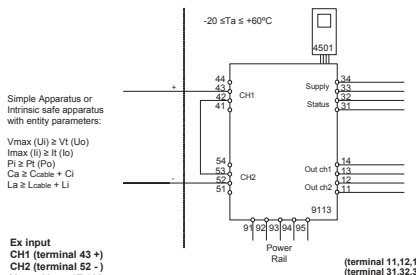

Ex input
CH1 (terminal 43 +)
CH2 (terminal 52 -)
Voc or U_o: 17.4 V
Isc or I_o: 18.4 mA
P_o: 80 mW
Lo/Ro 445 µH/Ω

	IIC or A,B	IIB or C,E,F	IIA or D,G
Ca or C_o	0.3 µF	1.6 µF	8 µF
La or L_o	80 mH	250 mH	600 mH

Vmax or U_i: 10 V
Imax or I_i: 30 mA
C_i: 15 nF
L_i 1.7 µH

(terminal 11,12,13,14)
(terminal 31,32,33,34)
(terminal 91,92,93,94,95)
U_m: 253V, max 400Hz

Installation notes 9113Ax-U9 and 9113Bx-U9:

The module must be installed in a tool-secured enclosure suitable for the application in accordance with the National Electrical Code (ANSI/NFPA 70) for installation in the United States, the Canadian Electrical Code for installations in Canada, or other local codes, as applicable.

The module is galvanically isolated and does not require grounding.

Install in pollution degree 2, overvoltage category II, in accordance with IEC 60664-1.

Use minimum 75 ºC copper conductors with wire size AWG: (26-14)

There are no serviceable parts in the equipment and no component substitution is permitted.

Warning: Substitution of components may impair intrinsic safety.
Avertissement: La substitution de composants peut compromettre la sécurité intrinsèque.

Warning: To prevent ignition of the explosive atmospheres, disconnect power before servicing and do not separate connectors, install or remove module from Power Rail when energized and an explosive gas mixture is present.
Avertissement : Pour éviter l'inflammation d'atmosphères explosibles, déconnectez l'alimentation avant les opérations d'entretien. Ne montez pas ou n'enlevez pas les connecteurs quand le module est sous tension et en présence d'un mélange de gaz. Ne montez pas ou n'enlevez pas les modules du rail d'alimentation en présence d'un mélange de gaz.

Installation notes 9113Bx-U9:

Associated Equipment /Appareillage Associé [Ex ia]

The Ex output current of this associated apparatus is limited by a resistor such that the output voltage-current plot is a straight line drawn between open-circuit voltage and short-circuit current.
Selected intrinsically safe equipment must be third party listed as intrinsically safe for the application, and have intrinsically safe entity parameters conforming with Table 1 below.

TABLE 1:

I.S. Equipment		Associated Apparatus
V max (or Ui)	≥	Voc or Vt (or Uo)
I max (or Ii)	≥	Isc or It (or Io)
P max, Pi	≥	Po
Ci + Ccable	≤	Ca (or Co)
Li + Lcable	≤	La (or Lo)

The module may also be connected to a simple apparatus as defined in Article 504.2 and installed and temperature classified in accordance with Article 504.10(D) of the National Electrical Code (ANSI/NFPA 70), or other local codes, as applicable.

Capacitance and inductance of the field wiring from the intrinsically safe equipment to the associated apparatus shall be calculated and must be included in the system calculations as shown in Table 1. Cable capacitance, Ccable, plus intrinsically safe equipment capacitance, Ci must be less than the marked capacitance, Ca (or Co), shown on any associated apparatus used. The same applies for inductance (Lcable, Li and La or Lo, respectively). Where the cable capacitance and inductance per foot are not known, the following values shall be used: Ccable = 60 pF/ft., Lcable = 0.2 µH/ft.

Where multiple circuits extend from the same piece of associated apparatus, they must be installed in separate cables or in one cable having suitable insulation. Refer to Article 504.30(B) of the National Electrical Code (ANSI/NFPA 70) and Instrument Society of America Recommended Practice ISA RP12.06 for installing intrinsically safe equipment.

Intrinsically safe circuits must be wired and separated in accordance with Article 504.20 of the National Electrical Code (ANSI/NFPA 70) or other local codes, as applicable.

The 9113B has not been evaluated for use in combination with another associated apparatus.

There are no serviceable parts in the equipment and no component substitution is permitted.

For installations in which both the Ci and Li of the intrinsically safe apparatus exceeds 1% of the Ca (or Co) and La (or Lo) parameters of the associated apparatus (excluding the cable), then 50% of Ca (or Co) and La (or Lo) parameters are applicable and shall not be exceeded. The reduced capacitance shall not be greater than 1 µF for Groups C and/or D, and 600 nF for Groups A and B. The values of Ca (or Co) and La (or Lo) determined by this method shall not be exceeded by the sum of all of Ci plus cable capacitances and the sum of all of the Li plus cable inductances in the circuit respectively.

9113Ax-U9 and 9113Bx- U9 Installation:

Non Hazardous area or
Class I, Division 2, Group ABCD T4
or Zone 2 Group IIC T4

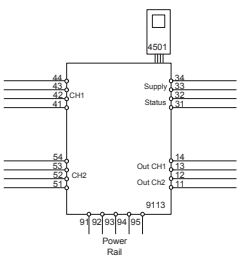

Supply terminal **(31,32)**
Voltage: 19.2 – 31.2 VDC

Class I, Division 2 or
Zone 2 installation:

Status relay, terminal (33,34)
Voltage max: 32 Vac/ 32 Vdc
Current max: 0.5 Aac / 0.3 Adc

INMETRO Desenhos para Instalação-V5R0

Para instalação segura do 9113B o manual seguinte deve ser observado. O módulo deve ser instalado somente por profissionais qualificados que estão familiarizados com as leis nacionais e internacionais, diretrizes e normas que se aplicam a esta área.
Ano de fabricação pode ser obtido a partir dos dois primeiros dígitos do número de série.

4501
Para a instalação na Zona 2 o seguinte deve ser observado. O módulo de programação de 4501 deve ser utilizado apenas com os módulos PRelectronics. É importante que o módulo esteja intacto e não tenha sido alterado ou modificado de qualquer maneira.
Apenas os módulos 4501 livres de poeira e umidade devem ser instalados.

INMETRO Certificado …… DEKRA 16.0003X

Marcasão:
[Ex ia Ga] IIC/IIB/IIA
Ex nA nC IIC T4 Gc
[Ex ia Da] IIIC
[Ex ia Ma] I

Normas:
ABNT NBR IEC 60079-0:2013, ABNT NBR IEC60079-11:2013, ABNT NBR IEC60079-15:2012.

Instalação 9113Bx 2 Circuitos

Área de classificada
Zona 0,1,2, 20, 21, 22

Área de nao classificada
ou Zona 2

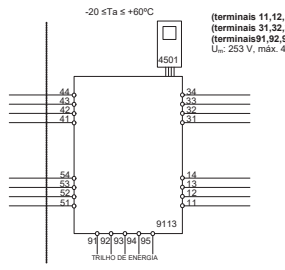

(terminais 11,12,13,14)
(terminais 31,32,33,34)
(terminais91,92,93,94,95)
U_m: 253 V, máx. 400 Hz

Entrada Ex
CN1 (terminais 41,42,43,44)
CN2 (terminais 51,52,53,54)
U_o: 8,7 V
I_o: 18,4 mA
P_o: 40 mW
Lo/Ro 892 µH/Ω

	IIC	IIB	IIA	I
C_o	5 µF	50 µF	1000 µF	1000 µF
L_o	100 mH	300 mH	700 mH	700 mH

U_i: 10 V
I_i: 30 mA
C_i: 30 nF
L_i 820 nH

Relê de estado, terminais (33,34)
Voltagem máx.: 125 VAC / 110 VDC
Potencia máx.: 62,5 VA / 32 W
Corrente máx.: 0,5 A AC / 0,3 ADC

Instalação Zone 2:
Voltagem máx.: 32 VAC / 32 VDC
Potência máx.: 16 VA / 32 W
Corrente máx.: 0,5 A AC / 1 ADC

Notas de Instalação:

Instalação em grau de poluição 2, categoria de sobretensão II conforme definido no IEC 60664-1.
Os circuitos não intrinsecamente seguros só pode ser connectado para sobretensão limitado ao categoria I/II como definido na IEC 60664-1.
Não separe conectores quando energizado ou quando uma mistura de gás explosivo estiver presente.
Não monte ou remova módulos do trilho de alimentação quando uma mistura explosiva de gás estiver presente.
Desligue a alimentação antes da manutenção.
A fiação de terminais sem uso não é permitida.
A fonte de Loop e terminais de entrada de corrente para o mesmo canal não deve ser aplicada ao mesmo tempo.
Em tipo de proteção [Ex ia Da] os parâmetros para a segurança intrínseca para grupo de gás IIB são aplicáveis.
Para a instalação em Zona 2, o módulo deve ser instalado em um invólucro conformidade com o tipo de proteção 'Ex n' ou 'Ex e', fornecendo no mínimo grau de proteçao IP54.
Dispositivos de entrada de cabo e elementos de vedação devem cumprir com os mesmos requisitos.

Para a instalação de trilho de energia na Zona 2, apenas o trilho de alimentação Rail 9400 fornecido pela Unidade de Controle de Potência 9410 é permitido.

Instalação 9113Bx 2 Circuitos combinado

Área de classificada
Zona 0,1,2, 20, 21, 22

Área de nao classificada
ou Zona 2

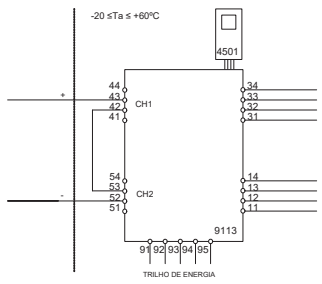

Entrada EX
CN1 (terminais 43 +)
CN2 (terminais 52 -)
U_o: 17,4 V
I_o: 18,4 mA
P_o: 80 mW
Lo/Ro 445 µH/Ω

(terminais 11,12,13,14)
(terminais 31,32,33,34)
(terminais 91,92,93,94,95)
U_m: 253 V, máx. 400 Hz

	IIC	IIB	IIA	I
C_o	0,3 µF	1,6 µF	8 µF	8 µF
L_o	80 mH	250 mH	600 mH	600 mH

U_i: 10 V
I_i: 30 mA
C_i: 15 nF
L_i: 1,7 µH

FM Installation drawing 9113QF01-V5R0

9113
For safe installation of 9113B the following must be observed. The module shall only be installed by qualified personnel who are familiar with the national and international laws, directives and standards that apply to this area.
Year of manufacture can be taken from the first two digits in the serial number.

4501
For Installation in Zone 2 / Division 2 the following must be observed.
The 4501 programming module is to be used solely with PRelectronics modules. It is important that the module is undamaged and has not been altered or modified in any way. Only 4501 modules free of dust and moisture shall be installed.

Hazardous Classified Location
Class I/II/III, Division 1, Group A,B,C,D,E,F,G
or Class I, Zone 0/1 Group IIC, [AEx ia] IIC
or Group IIC, [Ex ia Ga] IIC Gc

Unclassified Location or
Hazardous Classified Location
Class I, Division 2, Group A,B,C,D T4
or Class I Zone 2 Group IIC T4 Gc

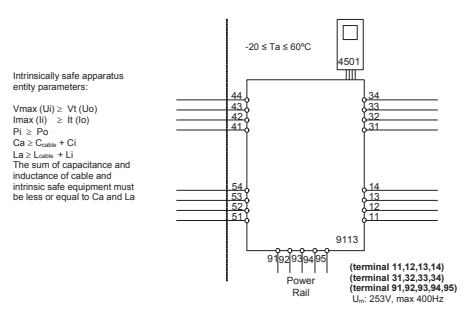

(terminal 11,12,13,14)
(terminal 31,32,33,34)
(terminal 91,92,93,94,95)
U_m: 253V, max 400Hz

Ex input
CH1 (terminal 41,42,43,44)
CH2 (terminal 51,52,53,54)
Vt (U_o): 8.7 V
It (I_o): 18.4 mA
P_o: 40 mW
Lo/Ro 892 µH/Ω

	IIC / Group A,B	IIB / Group C,E,F	IIA / Group D,G
C_a / C_o	5 µF	50 µF	1000 µF
L_a / L_o	100 mH	300 mH	700 mH

U_i: 10 V
I_i: 30 mA
C_i: 30 nF
L_i 820 nH

Status Relay. terminal (33,34)

Voltage max:	125VAC / 110VDC
Power max:	62,5VA / 32W
Current max:	0.5A AC / 0.3ADC
Zone 2 installation:	
Voltage max:	32VAC / 32VDC
Power max:	16VA / 32W
Current max:	0.5A AC / 1ADC

Installation notes:
In Class I, Division 2 installations, the subject equipment shall be mounted within a too-secured enclosure which is capable of accepting one or more of the Class I, Division 2 wiring methods specified in the National Electrical Code (ANSI/NFPA 70) or the Canadian Electrical Code (C22.1).
In Class I, Zone 2 installations, the subject equipment shall be mounted within a tool secured enclosure which is capable of accepting one or more of the Class I, Zone 2 wiring methods specified in the National Electrical Code (ANSI/NFPA 70) or the Canadian Electrical Code (C22.1). Where installed in outdoor or potentially wet locations, the enclosure shall, at a minimum, meet the requirements of IP54.
In Class I, Zone 2 installations, the installer shall ensure protection of supply terminals against transient voltages exceeding 140% of the rated supply voltage.

Install in environments rated Pollution Degree 2 or better; overvoltage category I or II.
The module must be supplied from a Power Supply having double or reinforced insulation.
The use of stranded wires is not permitted for mains wiring except when wires are fitted with cable ends.
For installation on the 9400 Power Rail the power must be supplied from Power Control Module Unit 9410.
The module is galvanic isolated and does not require grounding.
Use 60 / 75 ºC Copper Conductors with wire Size AWG: (26-14).
Warning: Substitution of components may impair intrinsic safety.
Warning: To prevent ignition of the explosive atmospheres, disconnect power before servicing and do not separate connectors when energized and an explosive gas mixture is present.

Hazardous Classified Location
Class I/II/III, Division 1, Group A,B,C,D,E,F,G
or Class I, Zone 0/1 Group IIC, [AEx ia] IIC
or Group IIC, [Ex ia Ga] IIC Gc

Unclassified Location or
Hazardous Classified Location
Class I, Division 2, Group A,B,C,D T4
or Class I Zone 2 Group IIC T4 Gc

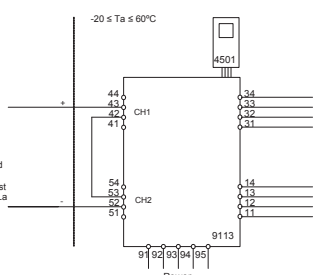

Ex input
CH1 (terminal 42,43)
CH2 (terminal 52,53)
Vt (U_o): 17.4 V
It (I_o): 18.4 mA
P_o: 80 mW
Lo/Ro 445 µH/Ω

	IIC / Group A,B	IIB / Group C,E,F	IIA / Group D,G
C_a / C_o	0.3 µF	1.6 µF	8 µF
L_a / L_o	80 mH	250 mH	600 mH

U_i: 10 V
I_i: 30 mA
C_i: 15 nF
L_i 1.7µH

(terminal 11,12,13,14)
(terminal 31,32,33,34)
(terminal 91,92,93,94,95)
U_m: 253V, max 400Hz

EU DECLARATION OF CONFORMITY

(9113DoC_102)

As manufacturer
PR electronics A/S, Lerbakken 10, DK-8410 Rønde
hereby declares that the following products:
Type: 9113
Name: Temperature / mA converter
From serial no.: 161458112
is in conformity with the following directives and standards:

The EMC Directive 2014/30/EU and later amendments
EN 61326-1 : 2013
Immunity test requirements for equipment intended to be used in an industrial electromagnetic environment. For specification of the acceptable EMC performance level, refer to the electrical specifications for the device.

The Low Voltage Directive 2014/35/EU and later amendments
EN 61010-1 : 2010

The ATEX Directive 2014/34/EU and later amendments
EN 60079-0 : 2012 + A11 : 2013, EN 60079-11 : 2012
and EN 60079-15 : 2010
ATEX certificate: PR 14ATEX0101 X (9113A)
ATEX certificate: KEMA 07ATEX0148 X (9113B)
ATEX notified body (type approval)
DEKRA Certification B.V.
Meander 1051, 6825 MJ Arnhem
P.O. Box 5185, 6802 ED Arnhem
The Netherlands

The RoHS2 Directive 2011/65/EU and later amendments
EN 50581 : 2012

Notified body 0344
DEKRA Certification B.V.
Meander 1051, 6825 MJ Arnhem
P.O. Box 5185, 6802 ED Arnhem
The Netherlands

Rønde, 11 December 2017

Stig Lindemann, CTO
Manufacturer's signature